Lobe knobs

Technopolymer

MATERIAL
Glass-fibre reinforced polyamide based (PA) technopolymer, black colour, matte finish.

STANDARD EXECUTIONS
Threaded pass-through hole.
- **VC.654-FP-B**: brass boss.
- **VC.654-FP-SST**: AISI 303 stainless steel boss.

FEATURES AND APPLICATIONS
The five-lobed shape allows the operator to grip it correctly with their fingers and prevents the accumulation of unsanitary residues, thanks to a rear section free of cavities. The metal part, made from AISI 303 stainless steel, is suitable for use in environments requiring corrosion-resistant materials.



ELESA Original design

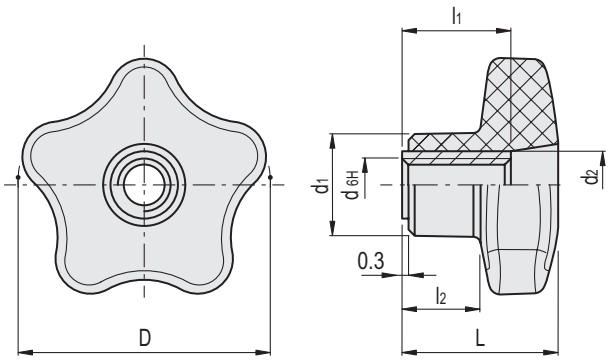

VC.654-FP-B

Code	Description	D	d_{6H}	L	d_1	d_2	l_1	l_2	⚖
175692	VC.654/40-FP-B-M6	40	M6	24.5	16.5	10	18	12	25
175693	VC.654/40-FP-B-M8	40	M8	24.5	16.5	10	18	12	22
175803	VC.654/50-FP-B-M8	50	M8	29.5	19	13	20	14	43
175804	VC.654/50-FP-B-M10	50	M10	29.5	19	13	20	14	41

VC.654-FP-SST **STAINLESS STEEL**

Code	Description	D	d_{6H}	L	d_1	d_2	l_1	l_2	⚖
175696	VC.654/40-FP-SST-M6	40	M6	24.5	16.5	10	18	12	25
175697	VC.654/40-FP-SST-M8	40	M8	24.5	16.5	10	18	12	22
175807	VC.654/50-FP-SST-M8	50	M8	29.5	19	13	20	14	43
175808	VC.654/50-FP-SST-M10	50	M10	29.5	19	13	20	14	41

ELESA and GANTER models all rights reserved in accordance with the law.
Always mention the source when reproducing our drawings.